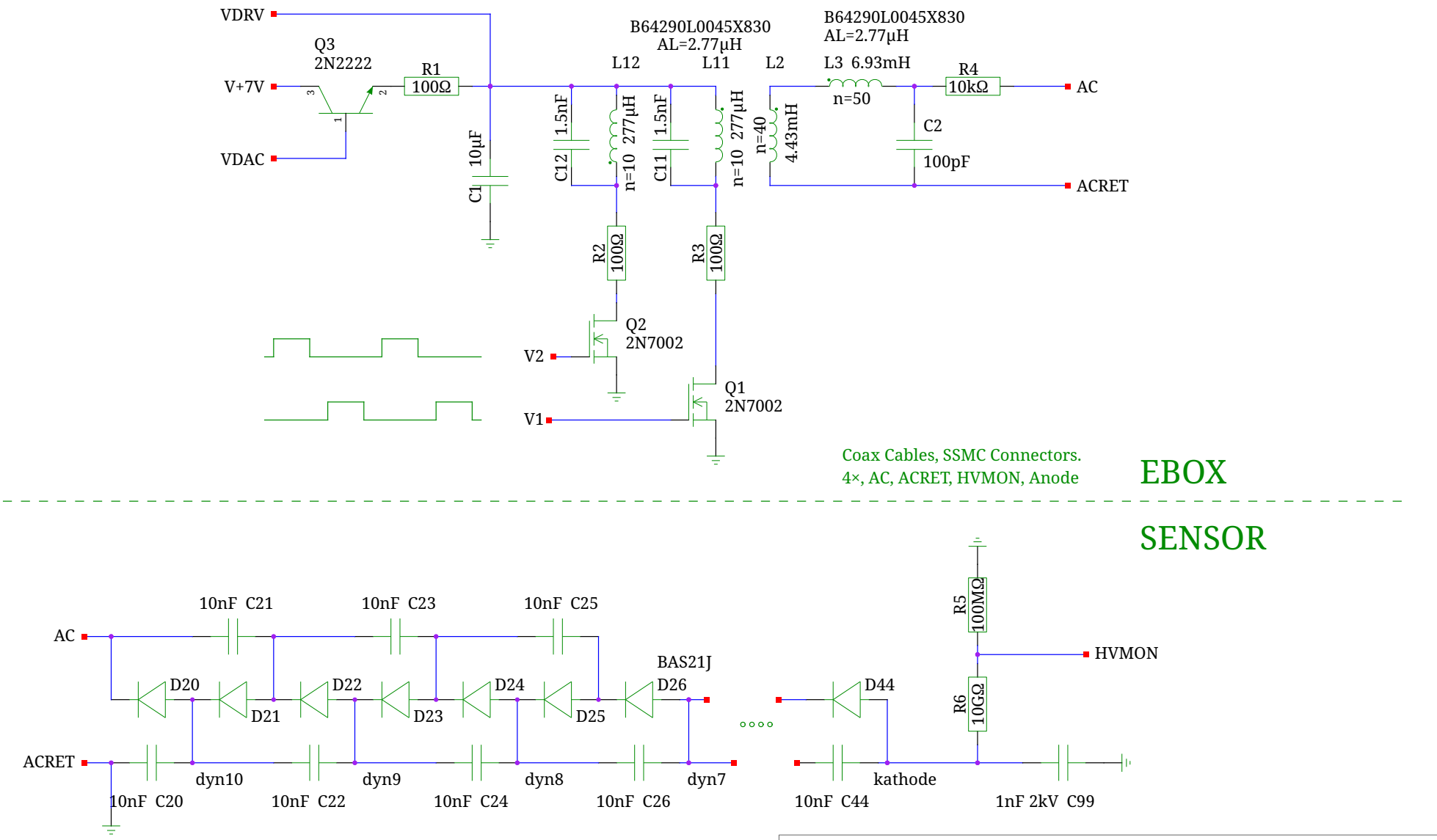

CHAOS PMT CW Cascade driver

TITLE

FILE:	hvosc.sch	REVISION:	pre-CDR
PAGE	1 OF 1	DRAWN BY:	Stephan