L2:
core: B64290L0038X830, AL=1760nH±30%
pins 1-5: n=12,
pins 2-6: n=12,
pins 3-7: n=5
pins 4-8: n=15
H// = 56µH
VOUT1=1.25V
VOUT3=3V
VOUT4=4V

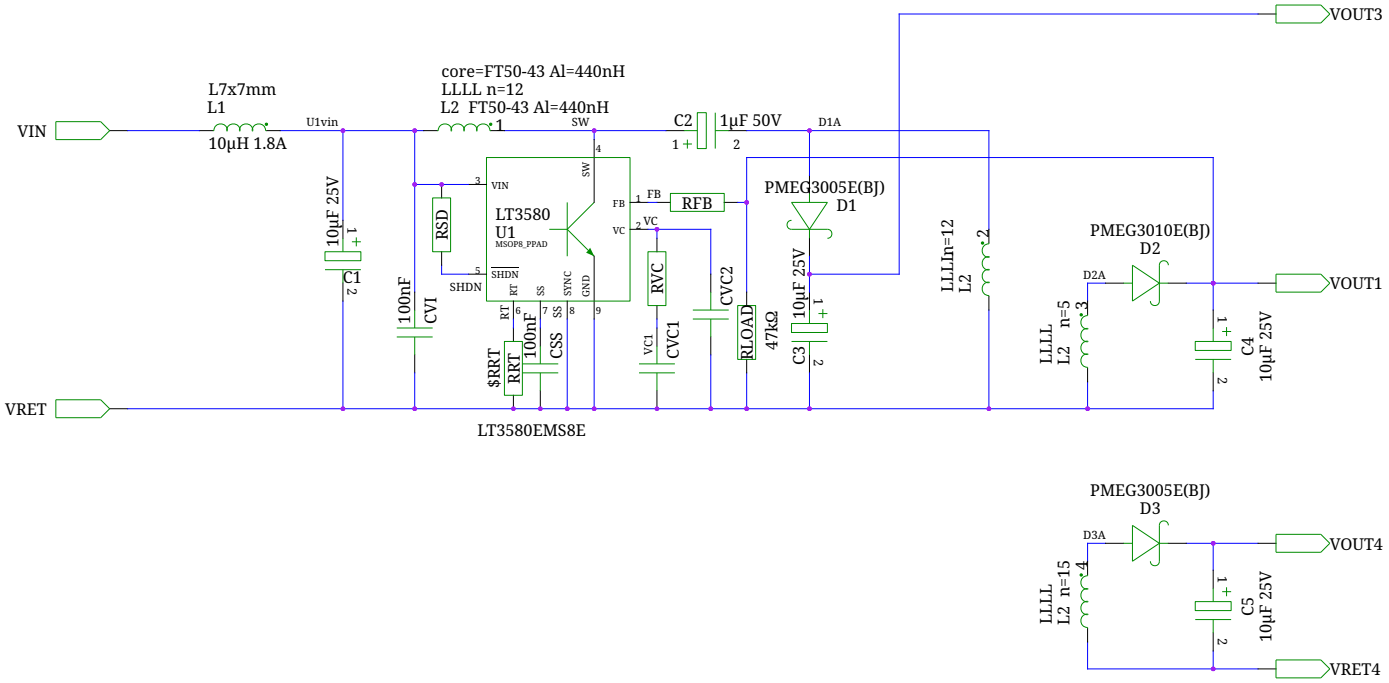

SEPIC converter with LT3580, 2× ±7V and -36V outputs

TITLE	$Id: sepic-dig.sch 8216 2021-04-15 07:21:21Z stephan $		
FILE:		REVISION:	$Revision: 8216 $
PAGE	OF	DRAWN BY:	SiB <stephan@psjt.org>